National Institute of Standards and Technology

Report of Investigation

Reference Material 8680

Paint on Fiberboard, Nominal 1 to 2 mg/cm^2 Lead

Reference Material (RM) 8680 is intended primarily for use in developing and validating field methods such as chemical test kits, portable x-ray fluorescence analyzers, and other techniques for the determination or detection of lead in paint coatings. A unit of RM 8680 consists of a 10.2 cm wide x 15.2 cm long x 1.3 cm thick section of painted fiberboard from a home built in the 1940's. The paint on the fiberboard is comprised of a beige colored layer closest to the fiberboard substrate, covered by a green lead-containing layer and overcoated with a white titanium-base paint layer.

Analytical Results: The reference value for lead, in units of mg/cm^2, for the center or other specified location for each unit of RM 8680 is listed in Table 1. Figure 1 indicates the circular regions, about 3 cm in diameter, intended for tests using portable, hand-held, x-ray fluorescence analyzers. Figure 2 indicates the locations for extracting samples of paint for tests using chemical test kits and other destructive methods.

Uncertainty Statement for the Center or Other Specified Location: The reference values and uncertainties for measurements taken at the center or other specified locations, as indicated in Figure 1, are given in Table 1. The reference value plus or minus its uncertainty represents a range in which there is 95 % confidence that the true areal density of the center or other specified location will fall [1,2].

Uncertainty Statement for the Corners of the RM Sections: The uncertainty for the samples taken at the corners as indicated in Figure 2, is ± 56 % of the corresponding reference value given in Table 1 (e.g. the uncertainty for unit AA2 is 1.73 mg/cm^2 ± 0.97 mg/cm^2). The reference value plus or minus its uncertainty represents a range in which there is 95 % confidence that the true areal density for all four corners will fall [1,2].

Expiration of Reference Value: The reference value of this RM is valid indefinitely within the measurement uncertainties specified, provided the RM is handled and stored in accordance with the instructions given in this report (see Instructions for Use). However, the reference value will be nullified if the RM is contaminated or modified. If there is any change in the reference value, purchasers will be notified by NIST. Return of the attached registration card will facilitate notification.

The coordination of the technical evaluation of this RM was under the direction of P.A. Pella of the NIST Analytical Chemistry Division.

Inductively coupled plasma-optical emission spectrometry analysis was performed at NIST by T.W. Vetter and L.J. Wood. Atomic Absorption measurements were made by M.S. Epstein. Laboratory x-ray fluorescence measurements were performed by A.F. Marlow, P.A. Pella, C. DeSai, P. Seo, and D. Lillian.

The statistical design of the experimental work and evaluation of the data were provided by E.S. Lagergren of the NIST Statistical Engineering Division.

The support aspects involved in the preparation, certification, and issuance of this material were coordinated through the Standard Reference Materials Program by B.S. MacDonald.

Gaithersburg, MD 20899
Certificate Issue Date: August 11, 1999

Thomas E. Gills, Chief
Standard Reference Materials Program

INSTRUCTIONS FOR USE

Non-destructive Testing: For testing of the center (Figure 1a) or other specified locations (Figure 1b or 1c) by portable, hand-held x-ray analyzers, the x-ray sensor should be placed flat on the RM. If a groove is present on the RM, the x-ray sensor should be placed midway between the groove and the edge of the unit as shown in Figure 1b. Furthermore, certain RM sections have slightly damaged paint surfaces at the center so that measurements on these sections must be performed off center. This off-center region is located on the painted surface, directly above an "X" on the substrate side of the unit, as shown in Figure 1c.

Figure 1. Recommended Measurement Locations on RM 8680

To minimize orientation effects when testing x-ray analyzers, four measurements are to be made on a section where the x-ray sensor

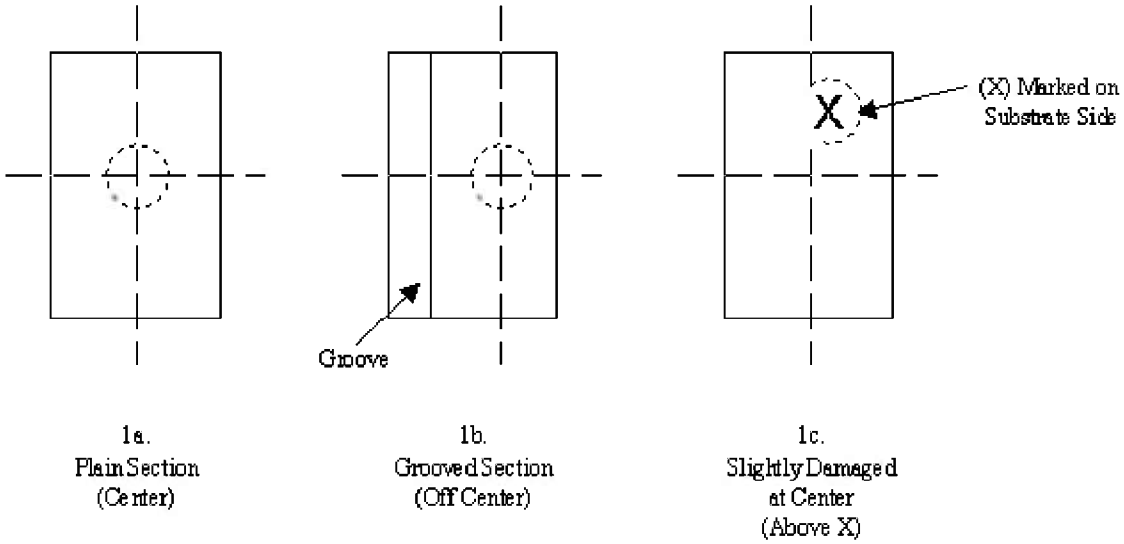

is rotated each time between measurements and an average value computed for lead. Four 90 ° rotations of the sensor in the same location are recommended. If this is not possible, especially for sections shown in 1b or 1c, either four measurements each at 180 ° are recommended, or four measurements in the same location but with as much rotation of the x-ray sensor as possible. Laboratory x-ray fluorescence measurements of RM sections performed at NIST showed relatively large effects due to the orientation of the section relative to the x-ray source. These effects are primarily responsible for the relatively high uncertainties in the recommended values.

Destructive Testing: The samples of paint shall be taken from any corner of the unit provided that the center region is preserved for x-ray analyzer testing, unless none is planned (see Non-destructive Testing). Note that for paint samples taken from the corners, that the uncertainty of the reference value increases to ± 56 % of the reference value given in Table 1. In order that the stated uncertainties apply for chemical test kits and other destructive sampling methods, samples (chips) shall be taken from a circular region that does not exceed 2 cm in diameter, from any corner of a unit, about 1.3 cm along a line from the corner edge towards the center as shown in Figure 2.

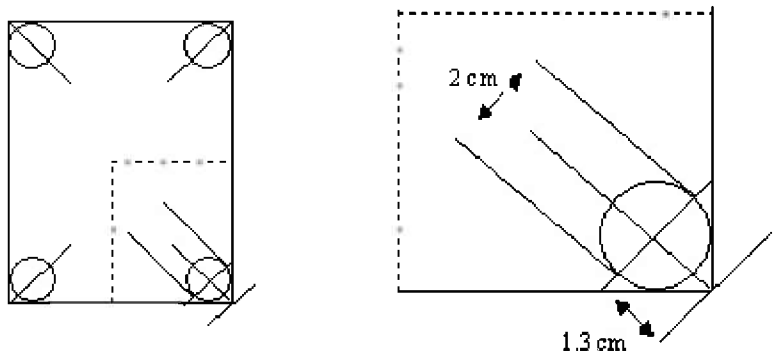

Figure 2. Corner Locations for Destructive Sampling

When removing paint samples, take samples deep enough to include some wallboard substrate to ensure that the lead-containing paint layer is sampled. Other areas of the unit may provide useful qualitative information regarding lead content. <u>However, the lead concentration of the paint material filling the groove, which is evident on certain units of this RM, may not be representative of the lead concentrations in Table 1. Therefore, the groove should be avoided for any testing purposes.</u>

Storage: This RM is to be stored in an air conditioned, or similar cool and dry environment, away from sunlight and fumes in the plastic envelope and package provided when not in use.

PREPARATION AND ANALYSIS

Preparation of RM 8680: The material for this RM consists of sections of wall panels taken from a single room of a residence in North Carolina and processed under the direction of the U.S. Environmental Protection Agency (EPA) and the Research Triangle Institute (RTI). Investigation of the lead levels of candidate materials, subsequent cutting and collection of the sections, packaging, and shipment to NIST of RM 8680 were performed under the supervision of W.F. Gutknecht, C.O. Whitaker, and C.M. Moore of the Research Triangle Institute, Research Triangle Park, NC, and S.L. Harper of the National Exposure Research Laboratory, Office of Research and Development, U.S. Environmental Protection Agency, Research Triangle Park, NC.

Analytical Methods: A commercial energy-dispersive x-ray spectrometer (XRF) was modified at NIST to allow measurement of the individual RM sections. A molybdenum secondary target was employed for excitation of lead L_α and L_β lines using a tungsten target x-ray tube operated at 30 kV in air. A 1.02 mg/cm^2 sample of SRM 2579, Lead Paint Film on Mylar Sheet for Portable X-ray Fluorescence Analyzers, was used as a control to monitor system stability and for conversion of net intensities to areal density. To minimize errors due to orientation effects, plain sections shown in Figure 1a were measured at the center for 60 s at each of four different orientations by rotation of the section by 90 °. The same location was measured after each rotation and the average net intensity was obtained for each lead L_α and L_β line. For sections containing a groove as shown in Figure 1b, four measurements were made at two 180 ° orientations and averaged. And for sections shown in Figure 1c, four measurements were made in the same location marked "X" with slight rotation of the unit after each measurement. For calibration of the x-ray instrument, 3 cm diameter disks were cored and removed from selected sections and measured as above except the counting time was extended to 300 s. These disks were subsequently dissolved in acid and analyzed for lead by inductively coupled plasma-optical emission (ICP-OES) or atomic absorption spectrometry (AAS) to provide a calibration relationship.

Cooperating Analysts and Laboratories:
C.G. Parsons; Niton Corporation, Bedford, MA.
R. Boyce; Scitec Corporation, Kennewick, WA.
G.D. Stafford; Warrington, Inc., Austin, TX.
A. Fischberg; Princeton-Gamma Tech, Inc., Princeton, NJ.

Table 1. Reference Lead Values for Individual Units of RM 8680

B.

ID	Reference Value mg/cm²	Uncertainty mg/cm²
AA2	1.73	±0.47
AA3	1.51	±0.42
AB2	1.61	±0.40
AB3	1.42	±0.31
AB4	1.49	±0.32
AbA1	2.35	±0.87
AC2	1.35	±0.33
AC3	1.59	±0.36
AC4	1.38	±0.30
AD2	1.56	±0.36
AD3	1.43	±0.33
AD4	1.77	±0.41
AE2	1.51	±0.35
AE3	1.59	±0.35
AE4	1.41	±0.31
AF2	1.62	±0.38
AF3	1.92	±0.48
AF4	1.79	±0.42
AfA2	1.59	±0.36
AG4	1.43	±0.31
AgA1	1.58	±0.37
AgC1	2.02	±0.54
AgC2	1.51	±0.42
AgD1	1.90	±0.48
AH2	1.23	±0.30
AH3	1.52	±0.38
AH4	1.45	±0.31
AI2	1.41	±0.30
AI3	1.62	±0.36
AI4	1.44	±0.33
AiA2	1.85	±0.51
AiA3	1.41	±0.37
AiA4	1.11	±0.31
AiB2	1.10	±0.27
AiB3	1.36	±0.37
AJ3	1.46	±0.39
AJ4	1.13	±0.31
AjA1	1.91	±0.47
AjA2	1.70	±0.39
AjA3	1.38	±0.39
AjB1	1.69	±0.38
AjB2	1.78	±0.42
AjB3	1.52	±0.42
AjC2	1.79	±0.43
AjC3	1.95	±0.53
AK2	1.27	±0.29
AK3	1.56	±0.36
AK4	1.76	±0.48
AL2	1.44	±0.41
AL4	1.88	±0.48
AM2	1.24	±0.34
AM3	1.65	±0.45
ID	Reference Value mg/cm²	Uncertainty mg/cm²
AM4	1.77	±0.42
AmB1	2.25	±0.63
AmC1	2.41	±0.70
AmD1	2.37	±0.69
AmD2	2.20	±0.60
AN2	1.28	±0.34
AN3	1.39	±0.35
AnA1	1.26	±0.30
AnB1	1.10	±0.29
AnB2	1.33	±0.31
AnC1	1.17	±0.27
AnC2	1.55	±0.37
AoB1	1.82	±0.51
AoC1	1.80	±0.42
AoD1	1.72	±0.41
AoE1	1.48	±0.36
AoF1	1.39	±0.38
ApA1	1.57	±0.35
ApA2	1.49	±0.36
ApA3	1.44	±0.38
ApB1	1.16	±0.31
ApB2	1.42	±0.35
ApB3	1.11	±0.28
ApC1	1.36	±0.35
ApC2	1.42	±0.39
ApC3	1.42	±0.33
AsA2	1.59	±0.53
AsB1	1.84	±0.53
AsB2	1.75	±0.47
AsC1	1.43	±0.39
AsD1	1.27	±0.38
AsD2	1.63	±0.50
AsE2	1.56	±0.51
AuA1	1.26	±0.39
AuA2	1.34	±0.32
AuA3	1.30	±0.37
AuB1	1.30	±0.31
AuB2	1.09	±0.34
AuB3	1.32	±0.34
AvA1	1.43	±0.40
AwA2	1.69	±0.38
AwA3	1.39	±0.36
AwA4	1.35	±0.34
AwB2	1.29	±0.30
AwB3	1.10	±0.27
AxA1	2.21	±0.67
AxA2	1.77	±0.41
AyA1	2.07	±0.54

AyA2	1.87	±0.60
BA1	1.40	±0.37
BA2	1.35	±0.32
BA3	1.17	±0.27
ID	Reference Value mg/cm²	Uncertainty mg/cm²
BB1	1.55	±0.35
BB2	1.20	±0.29
BB3	1.30	±0.29
BC1	1.51	±0.33
BC2	1.35	±0.32
BC3	1.12	±0.27
BD1	1.26	±0.32
BD2	1.24	±0.33
BD3	0.98	±0.26
BE2	2.10	±0.58
BE3	1.73	±0.40
BF1	1.74	±0.44
BF2	1.85	±0.51
BF3	1.91	±0.48
BG1	1.51	±0.37
BG2	1.80	±0.48
BG3	2.13	±0.57
BH1	1.57	±0.38
BH2	1.72	±0.43
BH3	1.68	±0.38
BI1	1.61	±0.37
BI2	1.64	±0.38
BI3	1.57	±0.38
BJ1	1.58	±0.39
BJ2	1.82	±0.48
BK1	1.67	±0.47
BK2	1.82	±0.46
BL1	1.19	±0.34
BL2	1.47	±0.39
BM2	1.38	±0.37
CA3	1.26	±0.29
CB2	1.36	±0.29
CB3	1.44	±0.31
CB4	1.30	±0.29
CC2	1.69	±0.43
CC3	1.39	±0.33
CC4	1.44	±0.32
CD2	1.78	±0.41
CD3	1.27	±0.33
CD4	1.14	±0.28
CE4	1.65	±0.40
CF4	2.08	±0.55
CG4	1.64	±0.37
CH4	2.11	±0.55
CI4	2.03	±0.52
CJ2	1.73	±0.43
CJ3	1.54	±0.37
CJ4	1.67	±0.38

CK2	1.89	±0.54
CK4	2.06	±0.63
CL3	1.96	±0.53
CL4	1.49	±0.33
CM2	1.63	±0.45
ID	Reference Value mg/cm²	Uncertainty mg/cm²
CM3	1.54	±0.37
CM4	1.40	±0.34
CN2	1.57	±0.43
CN3	1.51	±0.36
DA2	1.36	±0.38
DA3	1.32	±0.35
DA4	1.37	±0.33
DB2	1.32	±0.29
DB4	1.42	±0.31
DC2	1.27	±0.29
DC3	1.28	±0.30
DC4	1.30	±0.31
DD2	1.47	±0.36
DD3	1.35	±0.31
DD4	1.52	±0.36
DE2	1.59	±0.43
DE3	1.49	±0.38
DE4	1.56	±0.46
DF2	1.64	±0.45
DF3	1.98	±0.63
DG2	1.14	±0.32
DG3	1.68	±0.48
DG4	1.59	±0.43
DH2	1.31	±0.35
DH3	1.93	±0.49
DH4	1.79	±0.42
DI4	1.81	±0.46
DJ4	1.70	±0.39
DK4	1.70	±0.39
DL4	1.50	±0.40
DM4	1.57	±0.40
DN2	1.48	±0.42
DN3	1.81	±0.48
EA1	1.58	±0.38
EA2	1.31	±0.29
EA3	1.30	±0.30
EB1	1.24	±0.28
EB3	1.41	±0.33
EC1	1.34	±0.32
EC2	1.73	±0.43
EC3	1.72	±0.40
ED1	1.42	±0.33
ED2	1.55	±0.38
ED3	1.55	±0.34
EE1	1.83	±0.47
EE2	1.74	±0.42
EE3	1.81	±0.46

EF1	2.09	±0.59
EF2	1.96	±0.51
EF3	1.74	±0.49
EG1	1.64	±0.36
EG2	1.55	±0.37
EG3	1.32	±0.31
ID	Reference Value mg/cm²	Uncertainty mg/cm²
EH1	1.61	±0.42
EH2	1.39	±0.35
EH3	1.43	±0.31
EI1	2.08	±0.55
EI2	1.46	±0.40
EI3	1.52	±0.33
EJ3	1.64	±0.49
EJ4	1.46	±0.37
EK3	1.85	±0.54
EK4	2.00	±0.51
EL3	1.79	±0.47
EL4	1.68	±0.38
EM3	1.49	±0.41
EM4	1.77	±0.44
FA2	1.38	±0.32
FA3	1.54	±0.39
FA4	1.60	±0.35
FB3	1.33	±0.32
FB4	1.29	±0.29
FC2	1.27	±0.34
FC3	1.15	±0.32
FC4	1.18	±0.30
FD2	1.56	±0.39
FD3	1.39	±0.41
FD4	1.85	±0.57
FE2	2.18	±0.62
FE3	1.63	±0.47
FE4	1.84	±0.53
FF2	1.58	±0.39
FF3	1.90	±0.53
FF4	2.05	±0.57
FG2	1.49	±0.39
FG3	1.84	±0.46
FG4	1.62	±0.36
FH2	1.40	±0.33
FH3	1.69	±0.43
FH4	1.70	±0.41
FI2	1.56	±0.40
FI3	1.52	±0.37
FI4	1.60	±0.36
FJ2	1.91	±0.51
FJ3	1.89	±0.49
FJ4	1.73	±0.39
FK2	1.84	±0.48
FK3	2.15	±0.62
FK4	1.83	±0.51

FL2	1.38	±0.39
FL3	1.57	±0.46
FL4	1.94	±0.57
FM2	1.52	±0.40
FM3	1.45	±0.44
FM4	1.96	±0.59
GA3	1.30	±0.42
ID	Reference Value mg/cm²	Uncertainty mg/cm²
GA4	1.83	±0.62
GB4	1.54	±0.49
GC4	1.62	±0.52
GD4	1.45	±0.41
GH3	1.14	±0.32
GH4	1.19	±0.34
GI2	1.28	±0.33
HA1	1.59	±0.44
HA2	1.42	±0.36
HA3	1.31	±0.34
HB1	1.48	±0.40
HB2	1.19	±0.34
HB3	1.29	±0.33
HC1	1.40	±0.36
HC2	1.35	±0.38
HD1	1.38	±0.36
HD2	1.36	±0.39
HD3	1.43	±0.36
HE1	1.31	±0.33
HE2	1.49	±0.45
HE3	1.49	±0.38
HF1	1.64	±0.44
HF2	1.63	±0.44
HF3	1.87	±0.55
HG1	1.55	±0.40
HG2	1.47	±0.38
HG3	1.50	±0.38
HH1	1.53	±0.40
HH2	1.54	±0.40
HH3	1.48	±0.38
HJ1	2.00	±0.59
HJ3	1.66	±0.46
HK1	1.62	±0.42
HK3	1.70	±0.50
HL1	1.60	±0.42
HL3	1.46	±0.37
IA1	1.95	±0.57
IA2	1.53	±0.39
IB1	1.43	±0.38
IB2	1.61	±0.43
IC1	1.54	±0.40
IC2	1.60	±0.42
ID1	1.58	±0.42
ID2	1.76	±0.49
IE1	1.61	±0.43

IF1	1.74	±0.49
IG1	1.82	±0.53
IG2	1.82	±0.51
IH1	1.91	±0.56
IH2	2.06	±0.64
II1	1.65	±0.46
II2	1.89	±0.54
IJ2	1.72	±0.47
ID	Reference Value mg/cm²	Uncertainty mg/cm²
IK1	1.59	±0.51
IK2	1.69	±0.46
IL1	1.49	±0.46
IL2	1.70	±0.47
IM1	1.31	±0.39
IM2	1.58	±0.51
IN2	1.41	±0.46
JA1	1.59	±0.46
JB1	1.72	±0.50
JB2	1.69	±0.55
JC1	1.43	±0.37
JC2	1.72	±0.47
JD1	1.79	±0.52
JD2	1.44	±0.37
JE1	1.57	±0.47
JE2	1.63	±0.43
JF1	1.49	±0.44
JF2	1.66	±0.44
JG1	1.28	±0.33
JG2	1.34	±0.36
JH1	1.29	±0.40
JH2	1.50	±0.40
JI1	1.35	±0.42
JI2	1.39	±0.37
JJ1	1.29	±0.33
JJ2	1.40	±0.38
JK1	1.24	±0.35
JK2	1.29	±0.37
JL1	1.09	±0.31
JM1	1.06	±0.34
KA2	1.28	±0.33
KB2	1.25	±0.35
KC1	1.61	±0.42
KC2	1.31	±0.33
KD1	1.57	±0.41
KD2	1.27	±0.32
KE1	1.56	±0.42
KE2	1.50	±0.40
KF1	1.38	±0.35
KF2	1.36	±0.38
KG1	1.29	±0.33
KG2	1.43	±0.41
KH1	1.59	±0.42
KH2	1.43	±0.37

KI1	1.46	±0.37
KI2	1.35	±0.35
KJ2	1.45	±0.40
KK1	1.60	±0.43
KK2	1.59	±0.46
KL1	1.39	±0.39
KL2	1.14	±0.35
KM1	1.31	±0.36
KM2	1.40	±0.40
ID	Reference Value mg/cm²	Uncertainty mg/cm²
LA1	1.75	±0.54
LD1	1.76	±0.52
LD4	1.29	±0.38
LE1	1.54	±0.40
LE4	1.48	±0.47
LF1	1.58	±0.41
LF3	1.62	±0.53
LG1	1.54	±0.40
LG2	1.37	±0.35
LG3	1.76	±0.53
MA1	1.28	±0.34
MB1	1.03	±0.30
MC1	1.31	±0.33
MD1	1.23	±0.33
MD2	1.10	±0.30
ME1	1.39	±0.36
ME3	1.94	±0.57
MF1	1.78	±0.49
MG1	1.59	±0.43
MG2	1.59	±0.42
MH1	1.63	±0.50
MH2	1.72	±0.47
MI1	1.49	±0.38
MI2	1.79	±0.50
MJ1	1.50	±0.39
MJ2	1.28	±0.33
MK1	1.37	±0.35
MK2	1.21	±0.32
ML1	1.37	±0.35
ML2	1.22	±0.28
MM1	1.13	±0.32
MM2	1.23	±0.33
NC1	1.77	±0.49
ND1	1.90	±0.57
NE1	1.83	±0.60
NH1	1.40	±0.37
NI1	1.51	±0.38
NJ1	1.27	±0.32
NK1	1.21	±0.33
OA1	1.51	±0.41
OA2	1.35	±0.34
OA3	1.62	±0.53
OB1	1.19	±0.33

OB2	1.51	±0.48
OB3	1.30	±0.34
OC1	1.36	±0.34
OC2	1.39	±0.36
OD1	1.50	±0.39
OD2	1.56	±0.40
OD3	1.53	±0.41
OE1	1.88	±0.55
OE2	1.48	±0.43
OE3	1.71	±0.47
ID	Reference Value mg/cm²	Uncertainty mg/cm²
OF1	1.35	±0.35
OF2	1.86	±0.56
OF3	1.95	±0.58
OG1	1.61	±0.42
OG2	1.42	±0.42
OG3	1.49	±0.39
PA1	1.36	±0.35
PA2	1.21	±0.32
PB1	1.45	±0.37
PB2	1.17	±0.33
PC2	1.63	±0.45
PD1	1.39	±0.36
PD2	1.64	±0.43
PE1	1.45	±0.37
PE2	1.64	±0.48
QA1	1.76	±0.49
QA2	1.70	±0.47
QA3	1.68	±0.45
QB2	1.44	±0.37
QB3	1.55	±0.40
QC1	1.72	±0.49
QC2	1.44	±0.42
QC3	1.41	±0.36
QD1	1.97	±0.58
QE1	2.37	±0.69
QF1	1.56	±0.41
QG1	1.64	±0.43
RA1	2.06	±0.63
RB1	1.82	±0.52
RC1	1.86	±0.54
RD1	1.56	±0.40
RE1	1.73	±0.47
RF1	1.76	±0.48
RG1	1.74	±0.48
RH1	1.62	±0.44
SA2	1.69	±0.44
SA3	1.67	±0.45
SA4	1.60	±0.43
SB2	1.65	±0.46
SB3	1.52	±0.43
SB4	1.83	±0.51
SC2	1.73	±0.49

SC3	1.61	±0.42
SC4	1.62	±0.47
SD4	1.71	±0.46
SE4	1.60	±0.43
SF2	1.39	±0.38
SF3	1.97	±0.58
SF4	1.41	±0.38
TA3	1.58	±0.41
TA5	1.80	±0.51
TA6	1.58	±0.42
TB2	1.87	±0.53
ID	Reference Value mg/cm²	Uncertainty mg/cm²
TB3	1.44	±0.38
TB5	1.39	±0.35
TB6	1.49	±0.38
TC2	1.19	±0.36
TC3	1.16	±0.37
TC6	1.66	±0.45
TD2	1.40	±0.42
TD3	1.40	±0.41
TD4	1.63	±0.44
TD5	1.21	±0.38
TE3	1.56	±0.47
TF3	1.61	±0.42
TF6	1.72	±0.47
TG4	1.57	±0.44
TG5	1.38	±0.41
TG6	1.59	±0.42
UA1	1.30	±0.33
UA2	1.77	±0.53
UB1	1.63	±0.44
UB3	1.48	±0.40
UC1	1.74	±0.52
XA1	1.65	±0.45
XA2	1.33	±0.40
XA3	1.42	±0.41
ZA1	1.75	±0.49
ZA2	1.49	±0.39
ZA3	1.39	±0.36

Supplemental Information regarding the identification code of individual units from the original wall panels (See Preparation of RM 8680):

a. Upper case letters (A-Z) indicate the first 26 wall panels.
b. Upper case "A" followed by lower case letters (a-z) indicate the next 26 wall panels.
c. Upper case letter to indicate horizontal row, beginning at top of wall panel (closest to ceiling).
d. Number to indicate column, left to right.

Thus, for example, JG1 indicates panel J, row 7, from the top (e.g., G is the 7th letter in the alphabet), and 1, the first column from left to right; AmC2 indicates panel Am (39th panel), row 3, and column 2.

REFERENCES

[1] *Guide to the Expression of Uncertainty in Measurement*, ISBN 92-67-10188-9, 1st Ed. ISO, Geneva, Switzerland, (1993): see also Taylor, B.N. and Kuyatt, C.E., "Guidelines for Evaluating and Expressing the Uncertainty of NIST Measurement Results," NIST Technical Note 1297, U.S. Government Printing Office, Washington DC, (1994).

[2] Miller, R.G., Simultaneous Statistical Inference, McGraw Hill, NY, (1966).